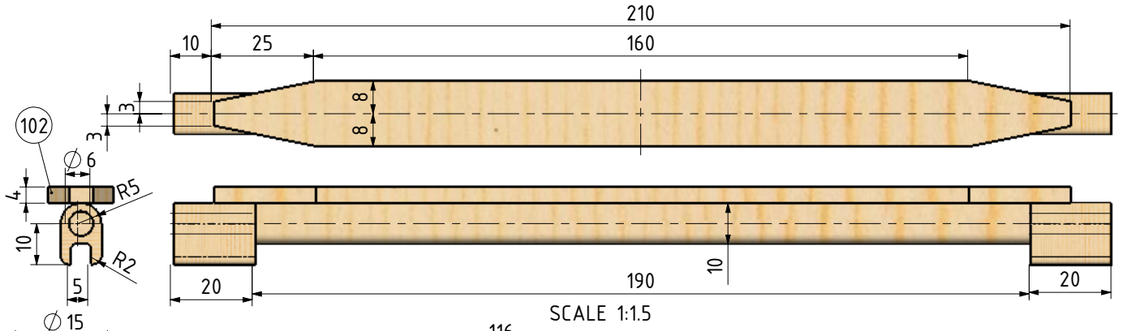

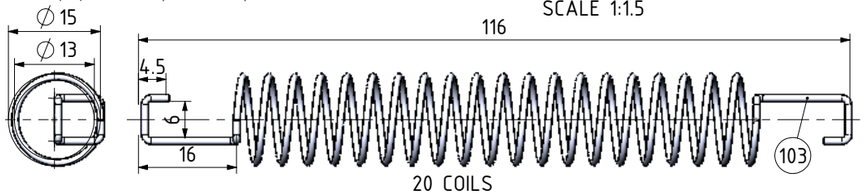

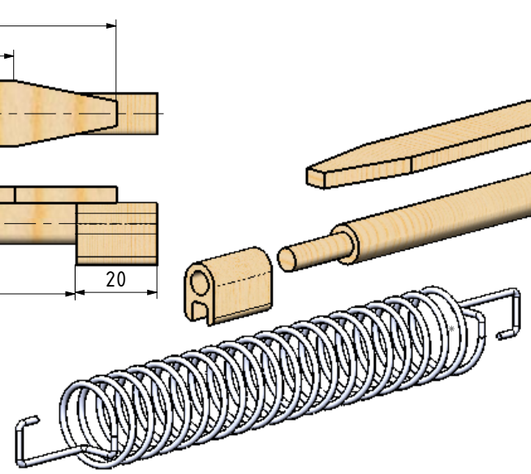

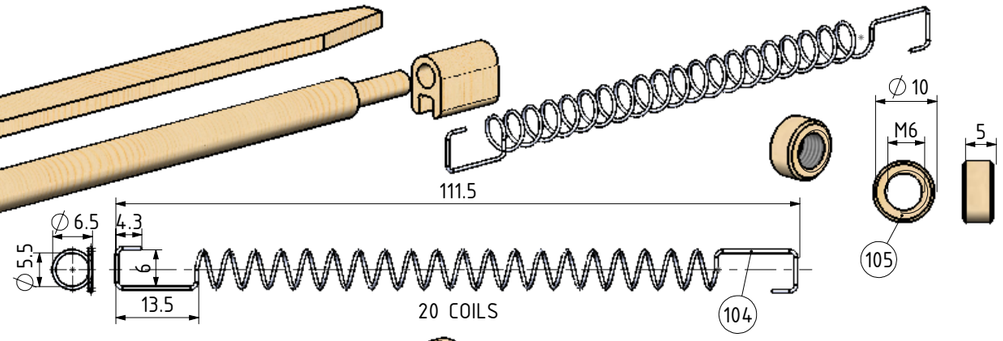

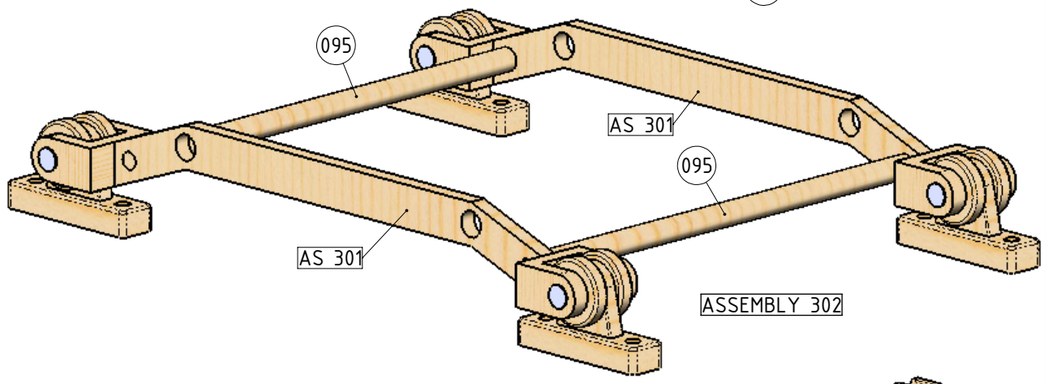

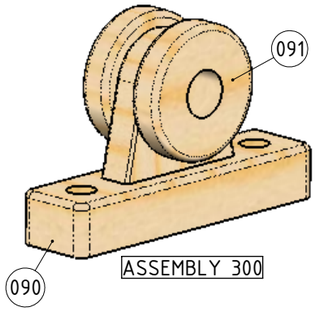

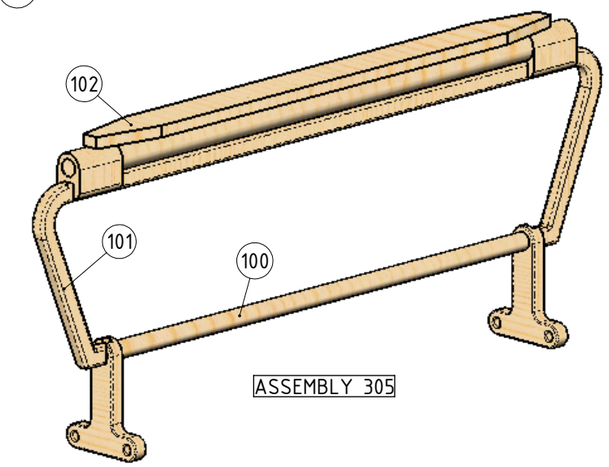

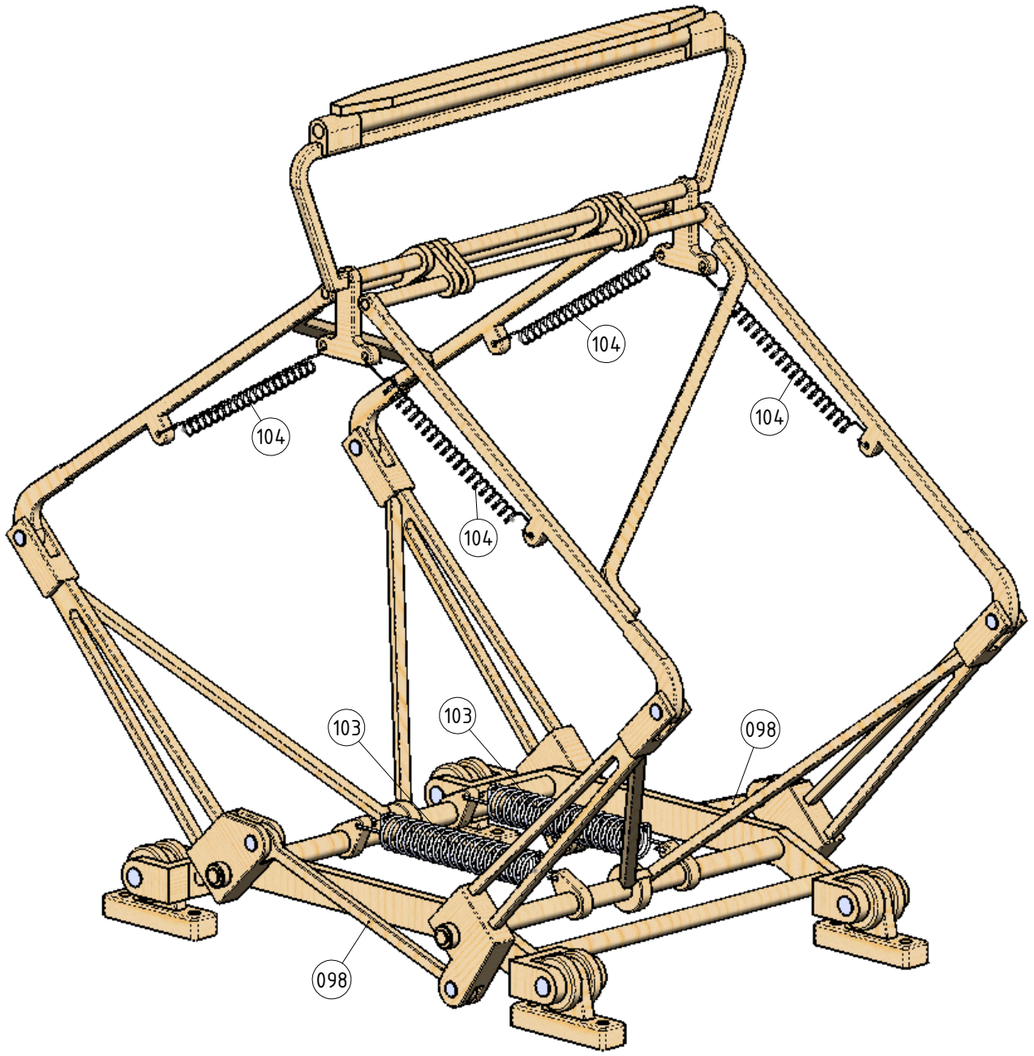

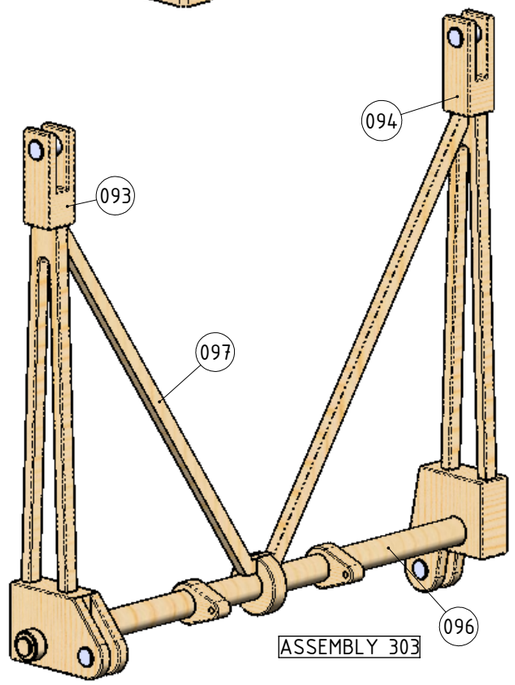

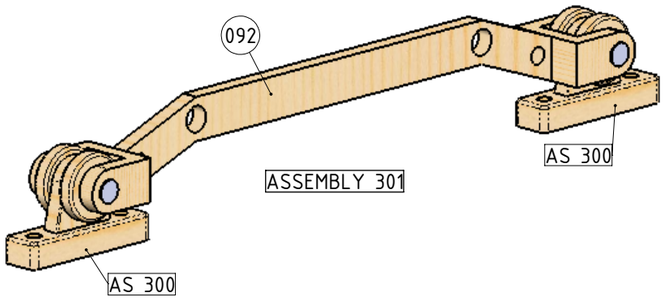

MODEL SCALE 1 : 7.8 GAUGE 184mm	DRAWING CONTENTS
DWG SCALE 1:1 @ A3 OR AS SHOWN	PANTOGRAPH PARTS &ASSEMBLIES
TITLE THE "BLAUWE TRAM" OF THE NZH MOTOR WAGON A502 AND WAGON B501	PROJECT No
	Copyright © J.A.M. DE WAAL PAPAKURA NZ
PROJECTION	JDW DRAUGHTING SERVICES
NOTES: 184mm=7.25inch	J.A.M. DE WAAL. 12 BRIGHTWELL STREET PAPAKURA 2110. NEW ZEALAND. PHONE: 0064 09 2988815. MOB: 0211791000 E-MAIL: dewaal@xtra.co.nz.
	DATE MARCH 2012
	SHEET 15 OF 15
	A3 No:BT-WD-500S

NOTES